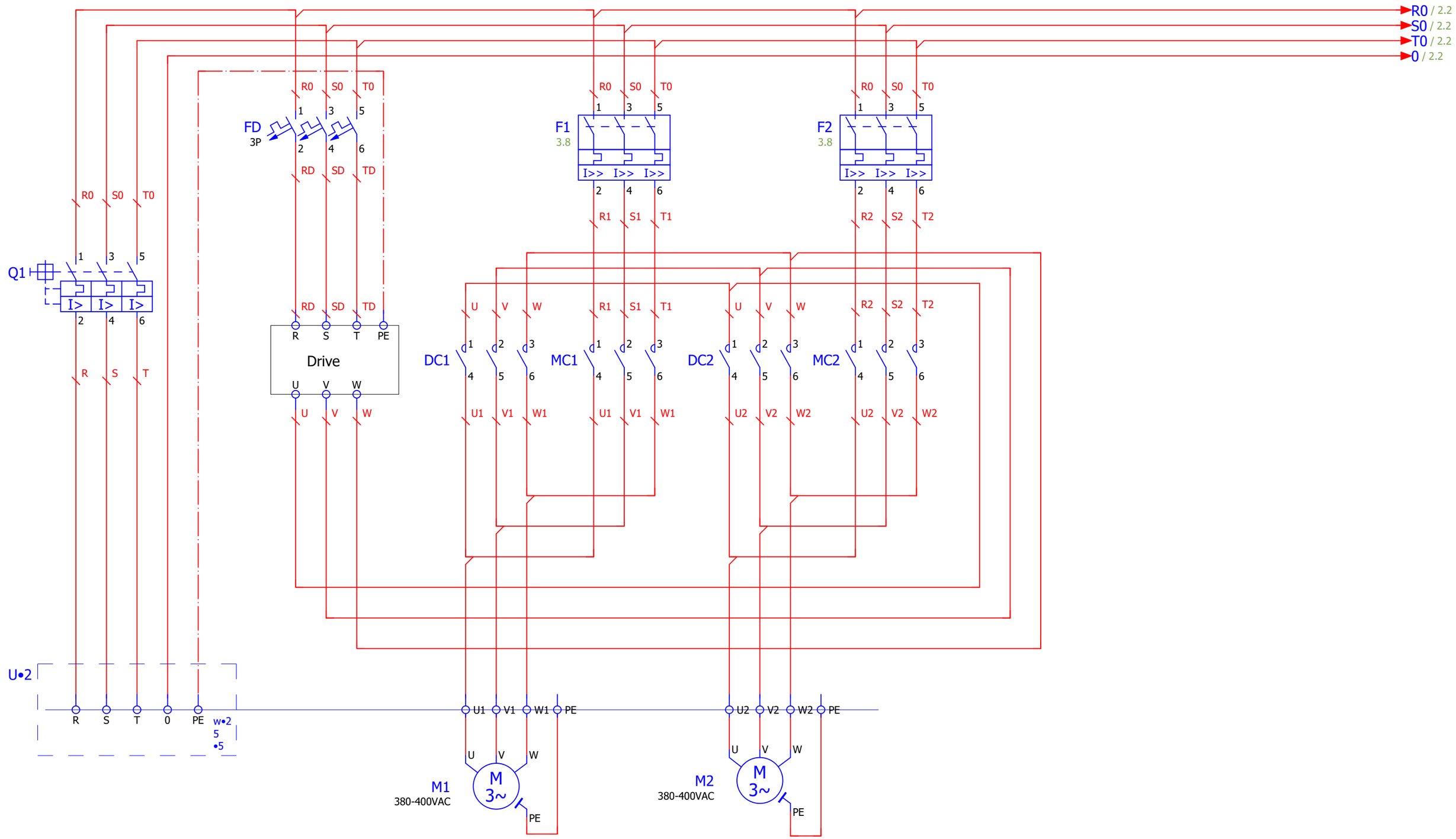

2

			Date					=	
			User	RAYANSYSTEM				+	
			Check.	4/19/2022					Pg. 1
Change	Date	Name	Stand.		First	Created for			4 Pg.

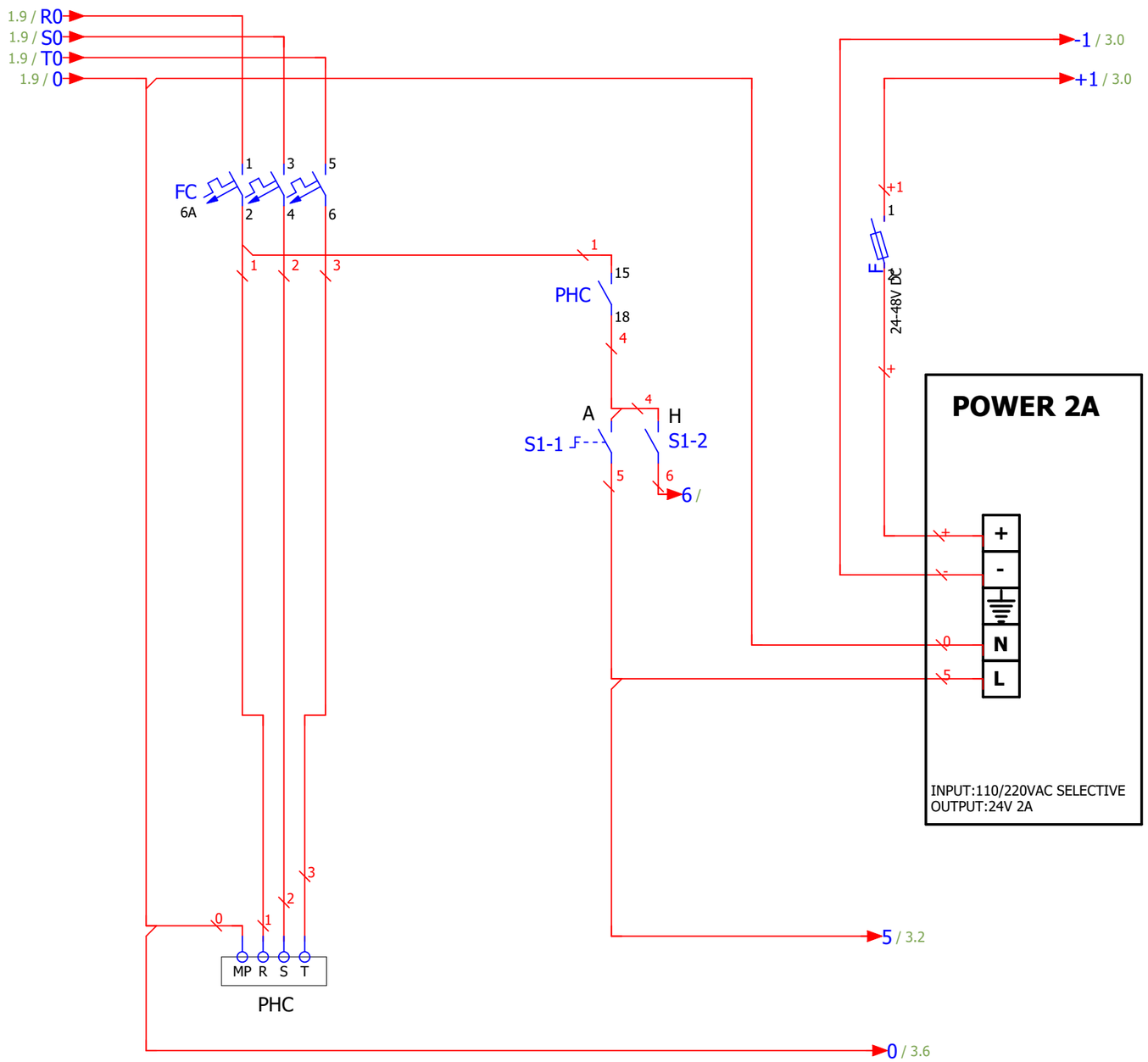

			Date	4/19/2022				=	
			Ed.	RAYANSYSTEM				+	
			Appr						Page 2
Modification	Date	Name	Original		Replacement of	Replaced by			Page 4

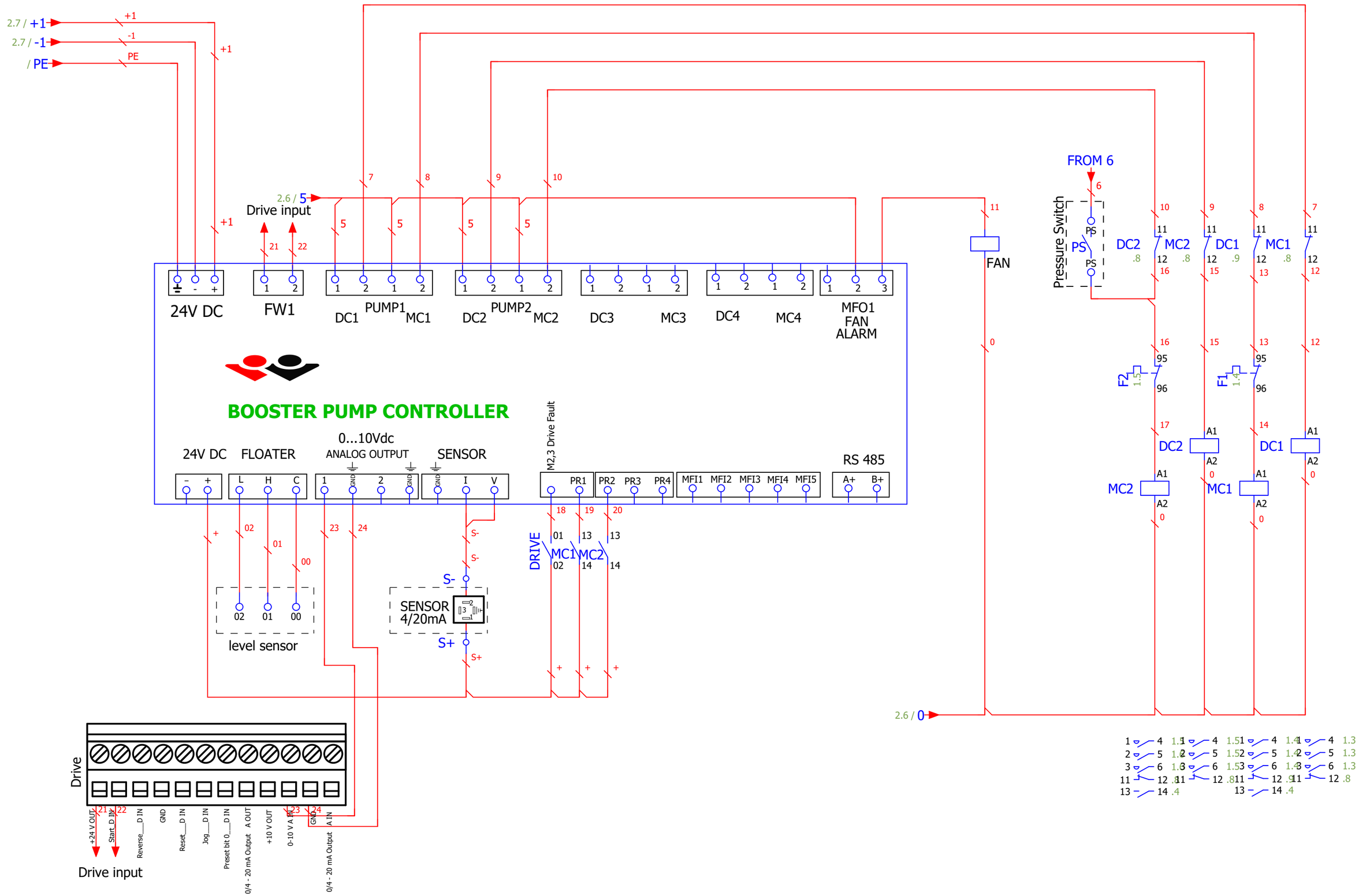

			Date	4/19/2022					=	
			Ed.	RAYANSYSTEM					+	
			Appr							Page 3
Modification	Date	Name	Original		Replacement of	Replaced by				Page 4

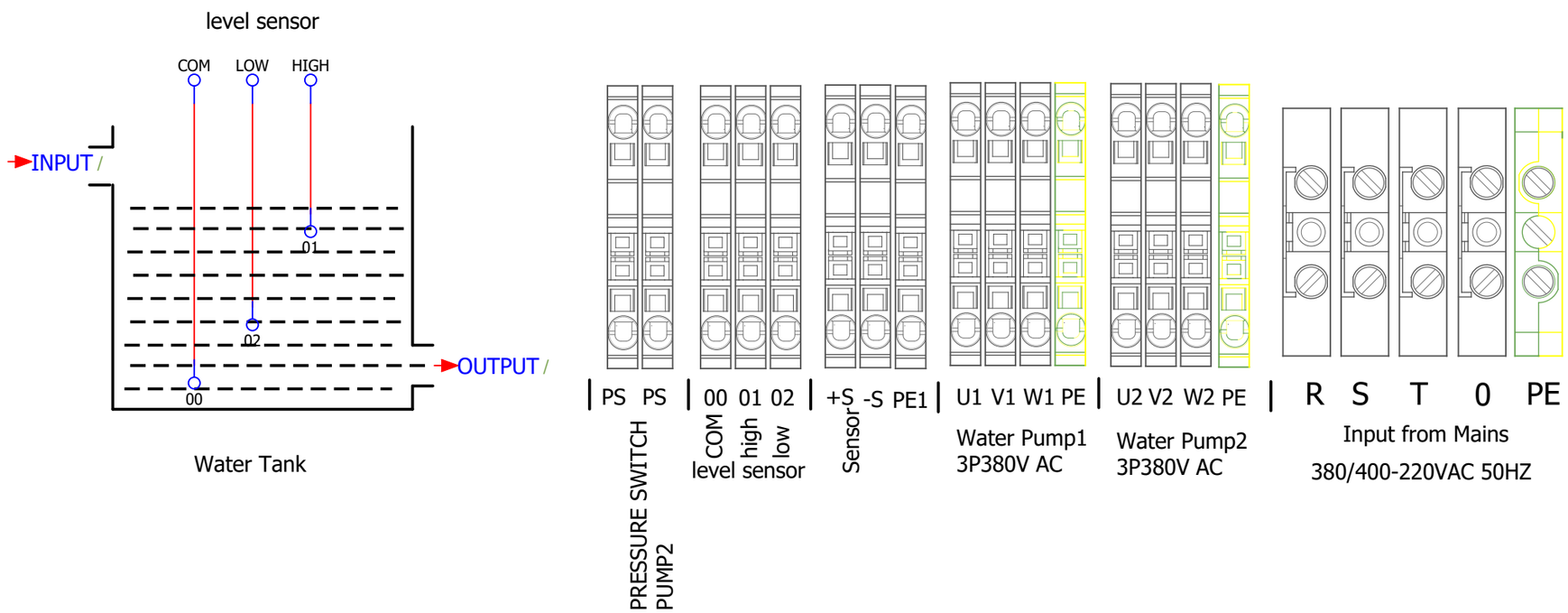

3

			Date						=	
			User	RAYANSYSTEM					+	
			Check.	4/19/2022						Pg. 4
Change	Date	Name	Stand.		First	Created for				4 Pg.